Patent Pending		
EP3995713B1	US17/504 838	CN202111305552X

HepcoMotion®
ADVANCED LINEAR SOLUTIONS

This data sheet interacts with

GV3, PRT2, GFX Catalogues

Self Adjusting Carriages

HepcoMotion Self Adjusting Carriages have been developed to allow for easy assembly onto slides. The carriages are factory set for optimal preload, enabling them to be simply pushed onto the slide during installation. This removes the need for adjustment and setting of carriages in the installation of a system.

Self Adjusting Carriages can also accommodate variation in the apex width of Slides around a system while maintaining optimum contact with the Slide V surface. This feature is of benefit in a range of situations which are further explored in this datasheet.

Self Adjusting Carriages are available for GV3, PRT2, GFX, and DTS product ranges. Please discuss application requirements with Hepco's Technical Sales department for advice on the specification of Self Adjusting Carriages and Bearing Blocks.

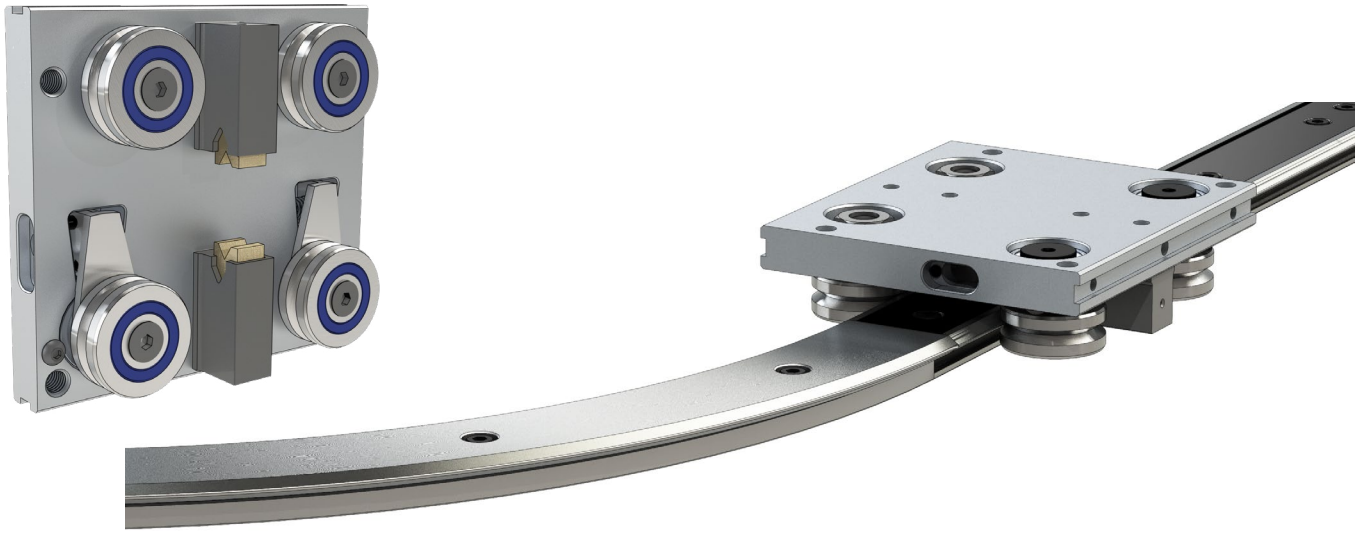

Features & Benefits

- Carriages are factory set for optimum preload and easily adapted for customer-specific preload requirements.
- No setting required during installation; simply push the Carriage onto the Slide.
- No re-setting required during the life of the system: the Self Adjusting Carriage mechanism automatically adjusts for wear, regardless of where it occurs on the Slide. This greatly extends the normal working life of a system.
- The Carriage will eliminate play and maintain preload, even if the Slide itself is not absolutely parallel.
- The Self Adjusting mechanism allows greater tolerance of undulating Slide mounting surface and deviation of Slide straightness.
- Constant preload prevents skidding of the bearings while accelerating and decelerating, thereby reducing wear.

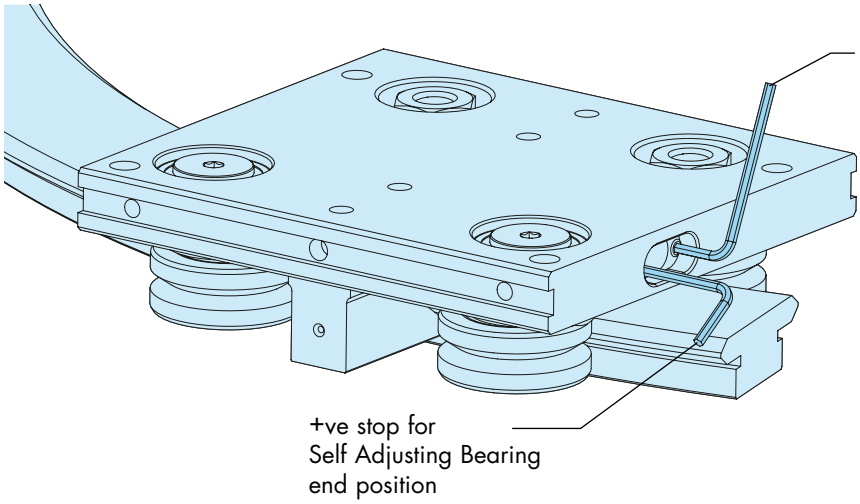

The range of travel of the Self Adjusting Bearing assemblies can be set using stop screws in the end faces of the carriage plate.

Preload is adjusted by changing the spring rate and can only be achieved during Carriage assembly at the factory.

Note: Hepco reserves the right, at its sole discretion, to change or modify the design of this product range, at any time.

Patent Pending		
EP3995713B1	US17/504 838	CN202111305552X

Self Adjusting Carriages

GV3

GV3 Carriages with Self Adjusting Bearing assemblies are based on the design of a standard GV3 Carriage*1 and available in two lengths*2. Carriage assemblies are available as standard with Ø25 and Ø34mm Axial Stiffness (AS) bearings and can be fitted with lubricators*3. Please refer to the GV3 catalogue for more information on carriage dimensions and compatible slide and bearing combinations.

The illustration below shows a typical GV3 carriage with Self Adjusting Bearings. Please note, both end faces of the carriage plate must be accessible to enable setting of the Self Adjusting Bearing stop positions.

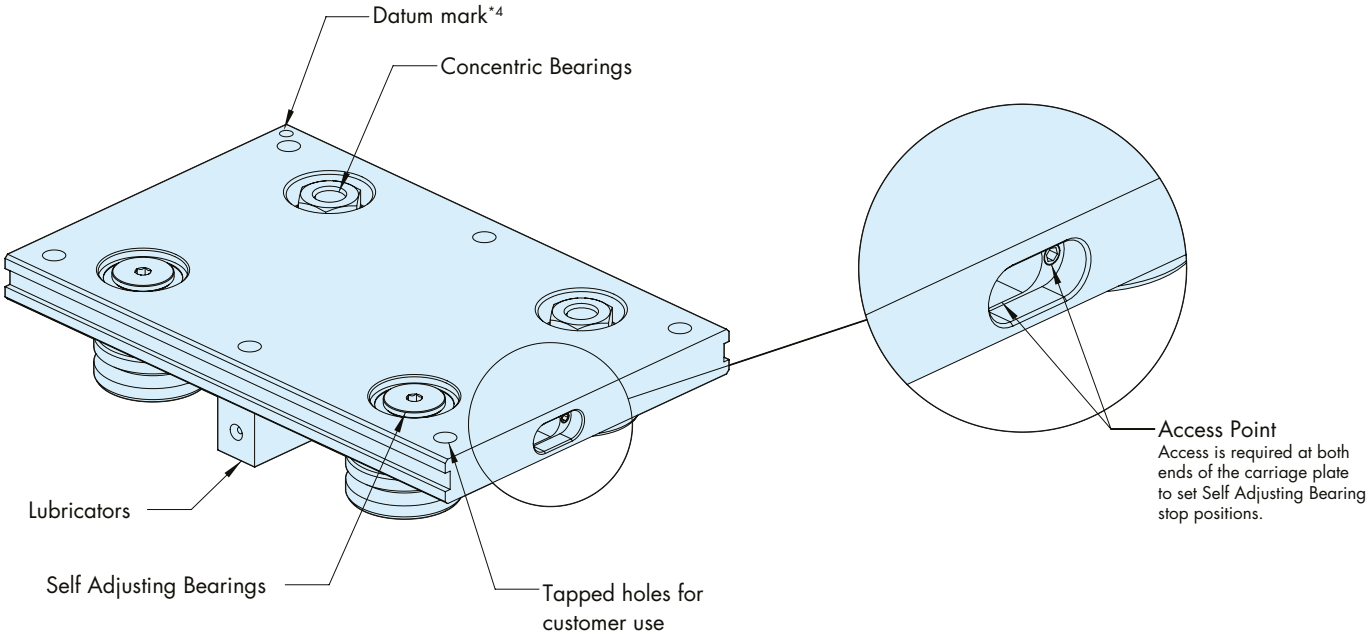

Notes

1. Self Adjusting Carriages are based on the standard GV3 Carriage assembly but are not available with Slimline Bearings.
2. Carriage plates are available in Medium and Long formats only - Self Adjusting Bearing assemblies are not compatible with Short length carriage plates. Refer to the main GV3 Catalogue for available options and dimensions.
3. Self Adjusting Carriages are not suitable for use with Cap Wipers due to the nature of their design.
4. The Datum mark identifies the reference edge used in manufacture. Concentric (fixed) bearings are always mounted this side.
5. Self Adjusting Carriages are only suitable for P1 grade Slides.

Note: Hepco reserves the right, at its sole discretion, to change or modify the design of this product range, at any time.

Patent Pending		
EP3995713B1	US17/504 838	CN202111305552X

Self Adjusting Carriages

GV3

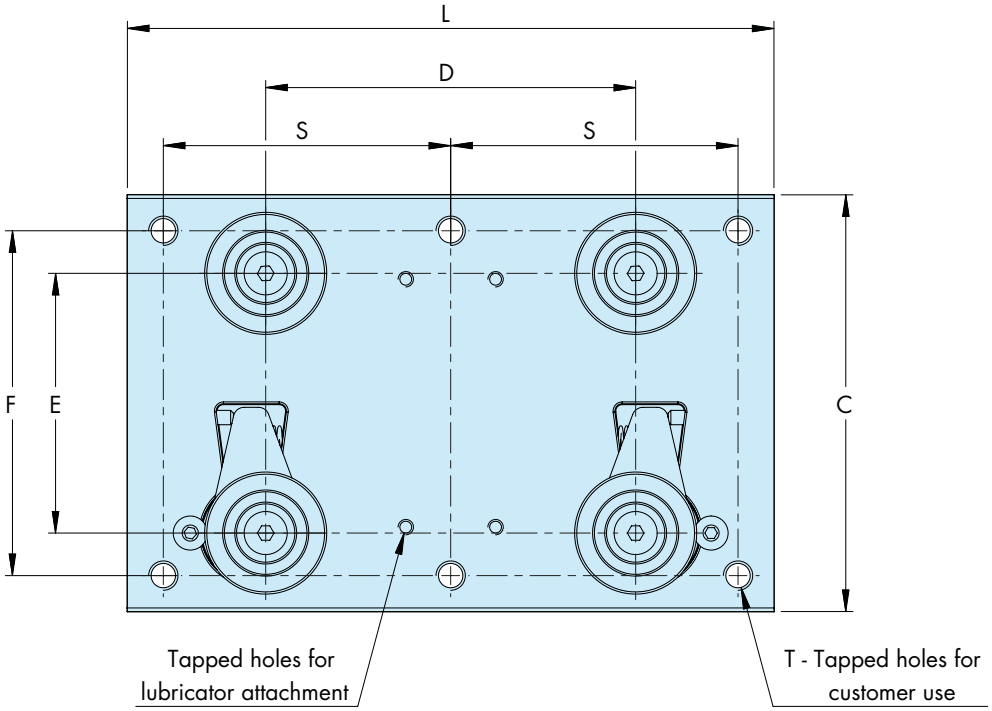

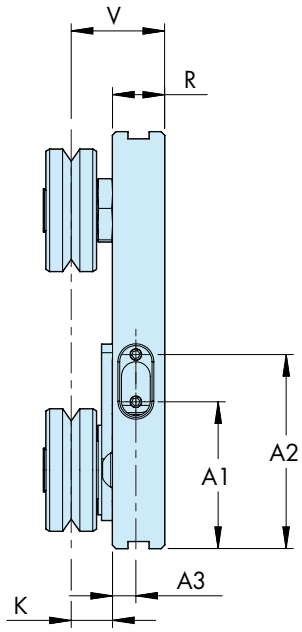

Part Number	Use With		A1	A2	A3	C	D	E	F	K	L	R	S	T	V
AU2525L135	NS25	S25	32.7	43.2	4.5	80	74	46.6	65	9	135	12.5	60	6 x M6	21.5
AU2525L180							120				180		82		
AU3525L150	NS35	S35	35.2	45.7	4.5	95	90	56.6	80	9	150	12.5	65	6 x M6	21.5
AU3525L200							140				200		90		
AU5025L160	NS50	S50	36.2	46.7	4.5	112	100	71.6	95	9	160	14	70	6 x M6	23
AU5025L220							160				220		100		
AU4434L180	NM44	M44	41	54	6.5	116	103	72.3	96	11.5	180	14.5	80	6 x M8	26
AU4434L225							153				225		103		
AU6034L200	NM60	M60	42.5	55.5	6.5	135	125	88.3	115	11.5	200	17	90	6 x M8	28.5
AU6034L280							205				280		130		
AU7634L240	NM76	M76	42	55	6.5	150	165	104.3	130	11.5	240	18	110	6 x M8	29.5
AU7634L340							265				340		160		

Ordering Example

(2 x AU4434 L180 LB) SA

Assembled carriage part number
See **GV3 Catalogue**

SA - Self Adjusting Journal

Note: Hepco reserves the right, at its sole discretion, to change or modify the design of this product range, at any time.

Patent Pending		
EP3995713B1	US17/504 838	CN202111305552X

Self Adjusting Carriages

PRT2

In Track Systems with four Bearing Carriage assemblies, an amount of play (lift off) is normally experienced when the carriage moves through the transition between straight and curve. To minimise lift off, Bearings must be positioned close to one another, or the radius of the curved Slide must be large.

A Self Adjusting Carriage may be of particular benefit where lift off is undesirable; lift off is completely eliminated and consistent preload maintained.

Self Adjusting Carriage assemblies for PRT2 systems will closely mirror standard PRT2 Fixed Centre Carriages. They are available with Ø25 and Ø34mm Axial Stiffness Bearings as standard and can be fitted with lubricators. Please refer to the PRT2 catalogue for dimensions and compatible ring and track sizes.

The illustration below shows a typical PRT2 carriage with Self Adjusting Bearings. Please note, the end faces of the carriage plate must be accessible to allow setting of the Self Adjusting Bearing stop positions.

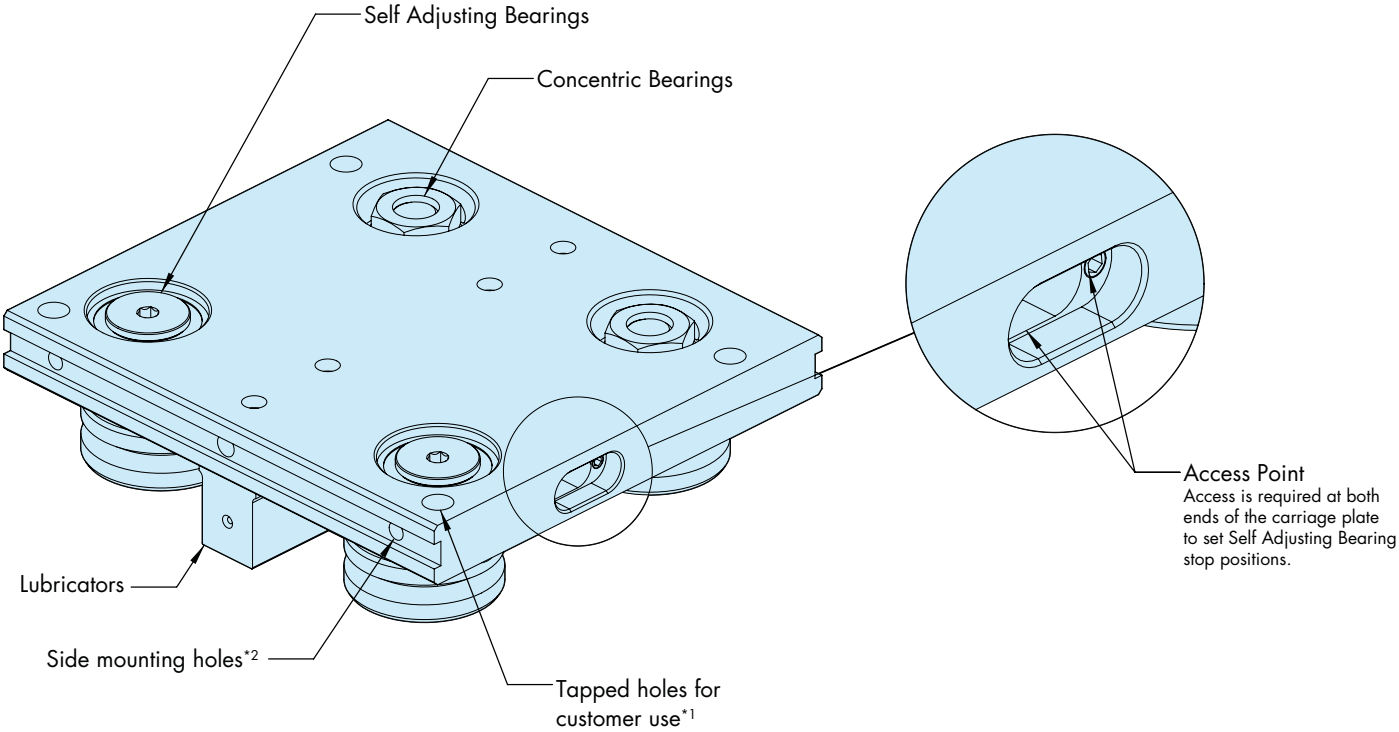

Self Adjusting Carriages also allow for designs with greater bearing spacing, increasing Carriage stability. Track Systems with tighter curve radii can also be specified where space is limited.

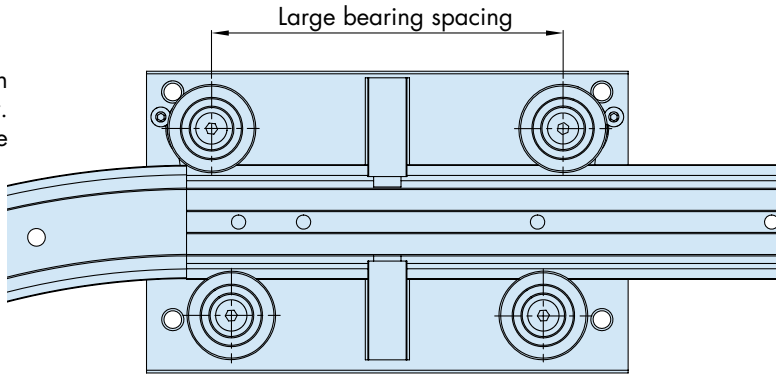

Notes

1. The position of tapped holes for customer use on PRT2 Carriages with Self Adjusting Bearings may differ to those on standard PRT2 Fixed Centre Carriage assemblies.
2. Side mounting holes are for DTS applications, and are not standard on PRT2 Carriages. Please contact our Technical Sales team for more information.

Note: Hepco reserves the right, at its sole discretion, to change or modify the design of this product range, at any time.

Patent Pending		
EP3995713B1	US17/504 838	CN202111305552X

Self Adjusting Carriages

PRT2

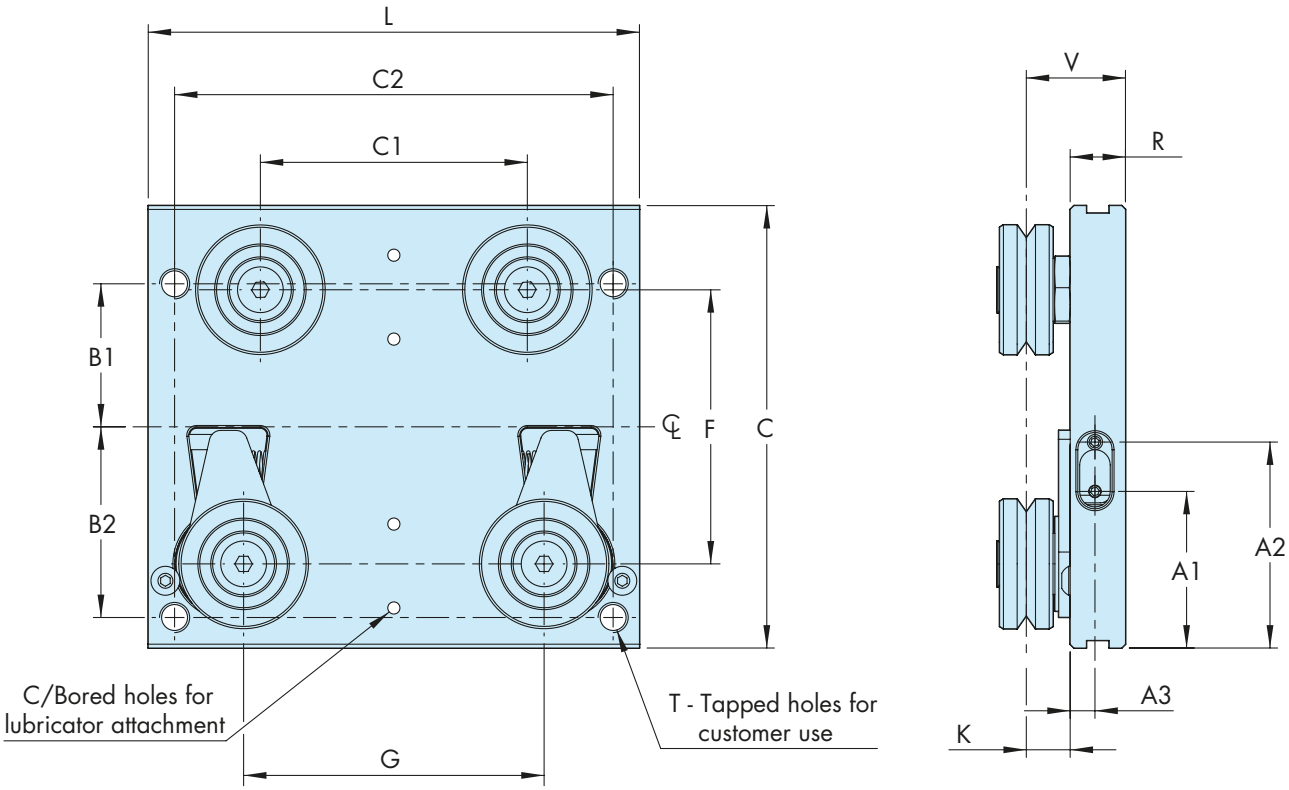

Part Number	Use With	A1	A2	A3	B1	B2	C	C1	C2	F	G	K	L	R	T	V
FCC25159	TR25159	32.5	43	4.5	25	30	80	37	80	46	50.15	9	95	12.5	4 x M6	21.5
FCC25255	TR25255							36.5	80		43.86		100			
FCC25351	TR25351							40	85		45.66		105			
FCC44468	TR44468	41	52	6.5	37.5	50	116	65	110	71.9	75.95	11.5	145	14.5	4 x M8	26
FCC44612	TR44612							70	115		78.80		150			

Ordering Example

(2 x FCC44612 LB) SA

Assembled carriage part number
See **PRT2 Catalogue**

SA - Self Adjusting Journal

Notes

1. For all other dimensional information, please refer to the PRT2 catalogue.

Note: Hepco reserves the right, at its sole discretion, to change or modify the design of this product range, at any time.

Patent Pending		
EP3995713B1	US17/504 838	CN202111305552X

Self Adjusting Carriages

GFX

Self Adjusting Bearings are of particular advantage in GFX systems, where they can be fitted to a system without the need for Bearing adjustment. If the track is subject to wear, the Self Adjusting Bearing assembly accommodates this and ensures preload is maintained around the full length of the Track System.

The illustrations below show the typical features of an FCC 4 bearing mover with Self Adjusting Bearings. Please contact Hepco for more information.

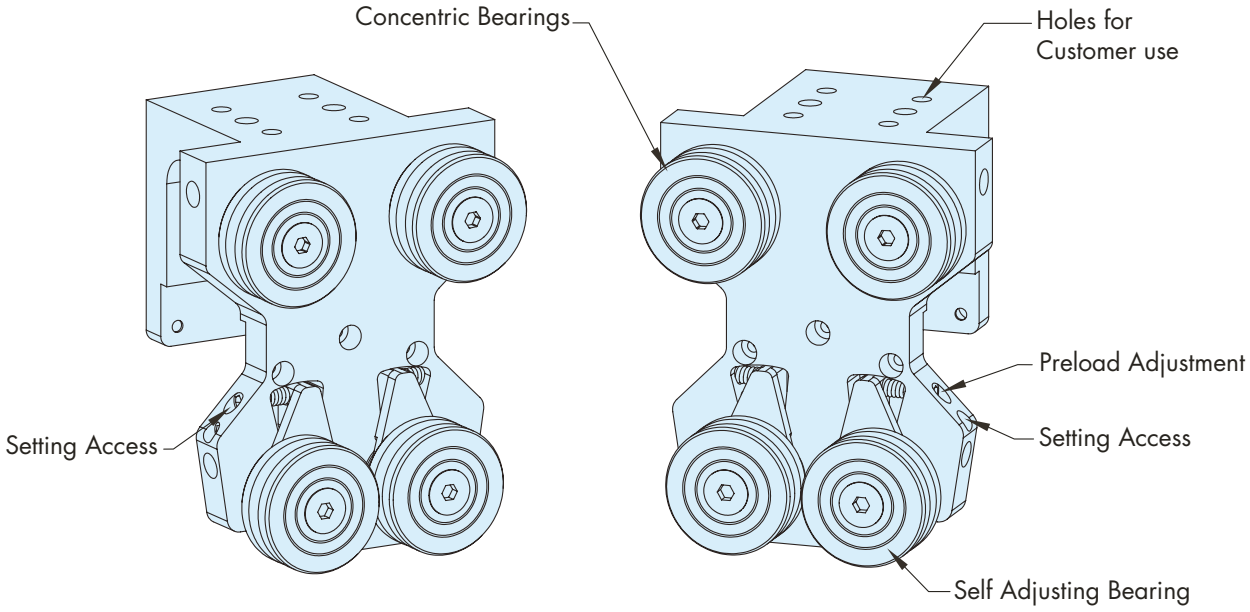

Four Bearing PRT2 Mover with Self Adjusting Bearing

In GFX systems with four Bearing movers, the Self Adjusting Bearing can be accessed, allowing small adjustments to be made to preload after the assembly has been factory set. Movers with Self Adjusting Bearings are available with either Ø25 or Ø34mm bearings.

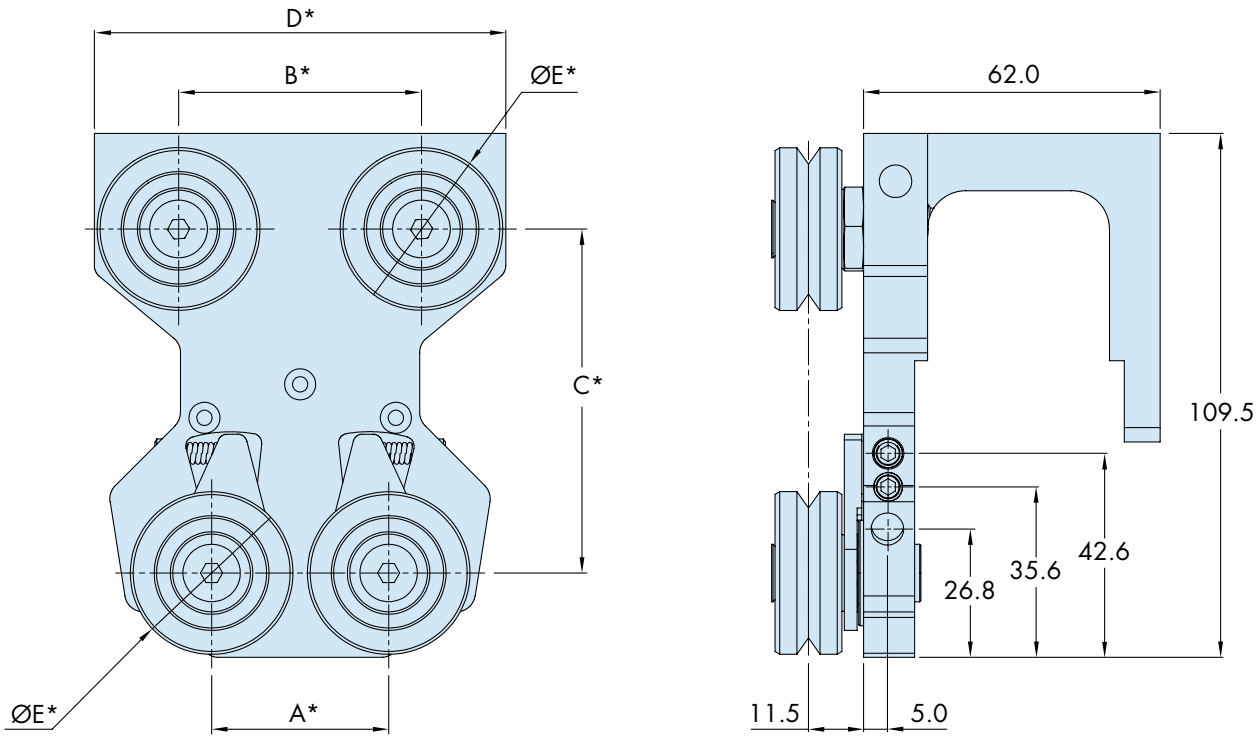

Dimensions with a * will be determined at the time of ordering, please contact Hepco to discuss your application.

Note: Hepco reserves the right, at its sole discretion, to change or modify the design of this product range, at any time.

Patent Pending		
EP3995713B1	US17/504 838	CN202111305552X

Self Adjusting Carriages

Bearing Block Assemblies

Self Adjusting Carriages will typically be supplied as complete, assembled Carriages (as shown on the preceding pages). In some applications a custom Bearing layout is required (for example for large platform Carriages or where the Slide is the moving component of the assembly).

Individual Bearing Block assemblies can be supplied either with Self Adjusting Bearings or fixed position Concentric Bearings. Bearing Blocks are available with either Ø25 or Ø34mm Axial Stiffness Bearings as standard.

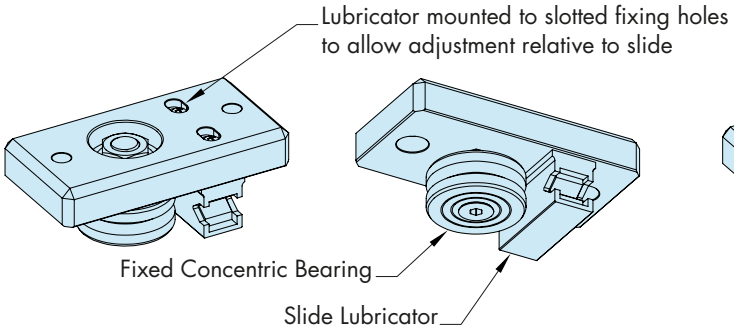

Fixed Concentric Bearing Block

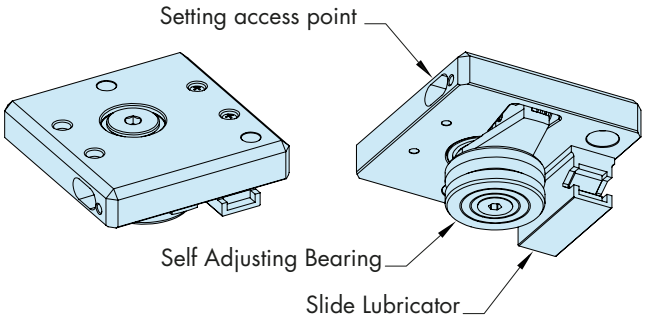

Self Adjusting Bearing Block

Bearing Block Assemblies in custom Carriage designs

Self Adjusting Bearing Blocks can be incorporated into a custom Carriage to suit Double or Single Edge Slides. Lubricators can be fitted to either side of the Self Adjusting Bearing assembly. Fixed Concentric Bearing Blocks should be specified with either right- or left-hand Lubricators.

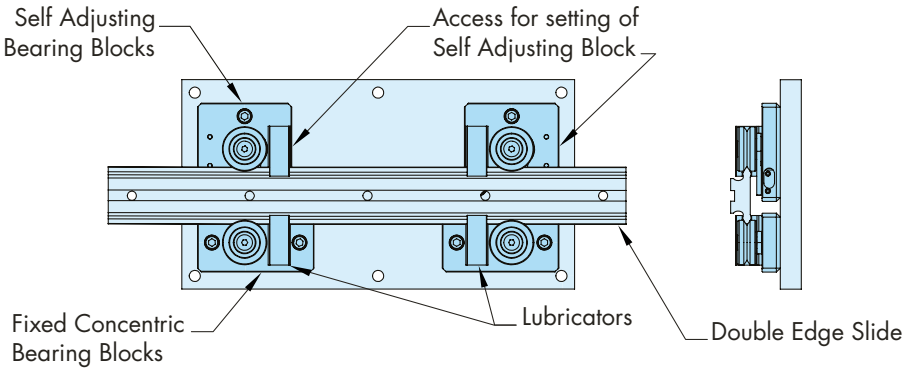

Custom Carriage with Double Edge Slide

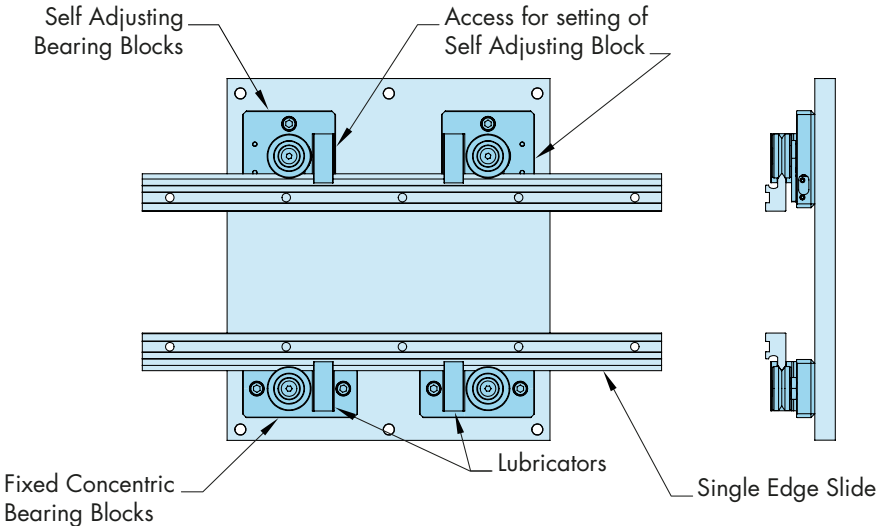

Custom Carriage with two Single Edge Slides

Note: Hepco reserves the right, at its sole discretion, to change or modify the design of this product range, at any time.

Patent Pending		
EP3995713B1	US17/504 838	CN202111305552X

Self Adjusting Carriages

Bearing Block Assemblies

Bearing Block Assemblies where the Slide is the moving element

Bearing Blocks with Self Adjusting Bearings can be used alongside Blind Hole fixing Concentric Bearings. In the example assembly illustrated below, Self Adjusting Bearing Blocks are mounted in recessed pockets in the machine bed. The pockets are sufficiently large to allow access for Bearing adjustment. Blind Hole Fixing Concentric Bearings are mounted directly to the machine bed on the opposite side of the Slide (there is no need to machine recessed pockets).

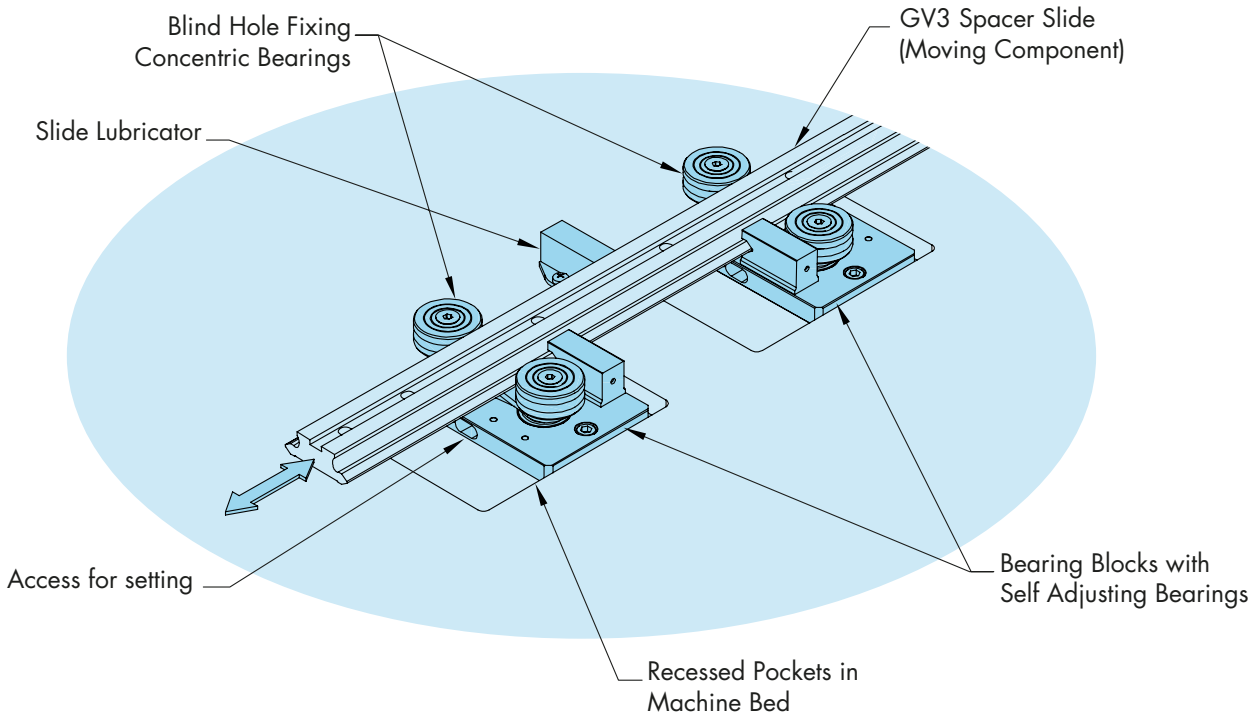

The use of Bearing Block Assemblies with fixed Bearings allows for removal of Slides without complete system disassembly; a single fixing screw can be removed from each Fixed Concentric Bearing Block, which can then be rotated away from the Slide, freeing the Slide from the Bearing.

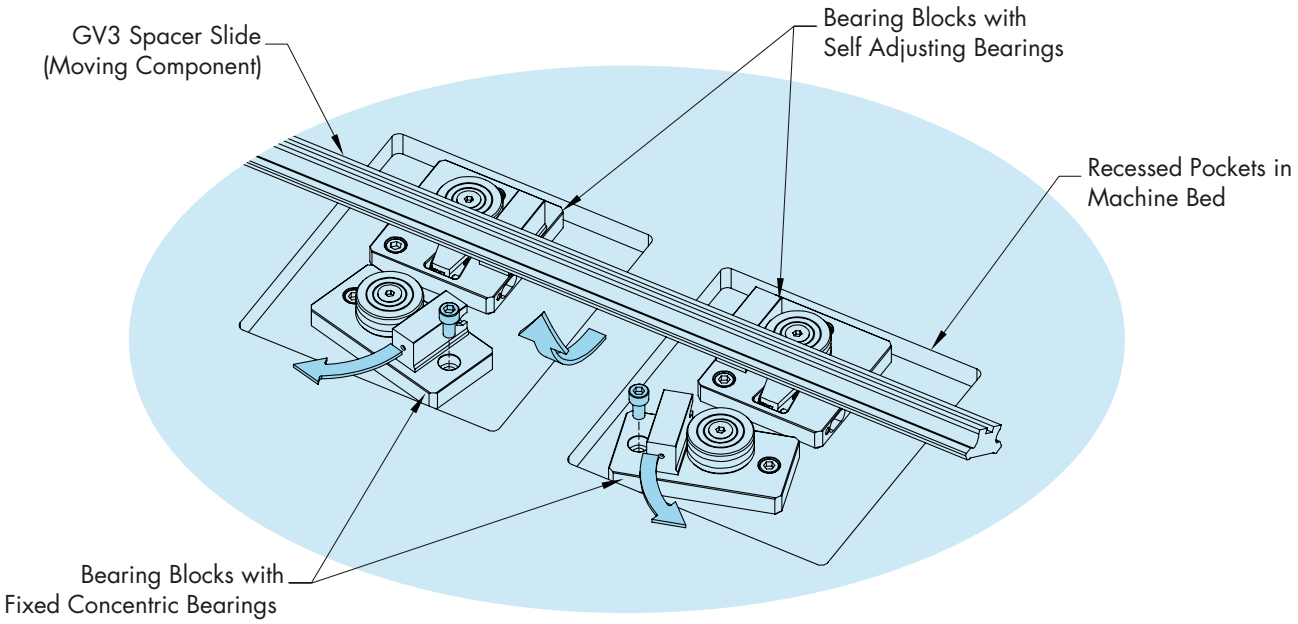

Note: Hepco reserves the right, at its sole discretion, to change or modify the design of this product range, at any time.

Patent Pending		
EP3995713B1	US17/504 838	CN202111305552X

Self Adjusting Carriages

Load Capacity

The load capacity and life of HepcoMotion 'V' Slide Systems will be determined by several factors. The key issues are the size and type of Bearing and Slide, the presence or absence of lubrication and the magnitude and direction of loads. Other factors, including operational speed, length of stroke and environmental conditions, may also have an effect.

The nature of the Self Adjusting Bearing assembly means a Self Adjusting Carriage will behave differently depending on the direction and type of load applied. The preload and spring rate of the Self Adjusting Bearing assemblies, in combination with the spacing between Bearings, will influence Carriage load capacity. Self Adjusting Bearing assemblies are able to float freely under load until they meet the limit of travel. Adjustable stops within the Bearing assembly can be used to control the range of travel of the Self Adjusting Bearing and adapt the behaviours of the Carriage under load.

The tables on the following page define the load capacities of four-bearing Carriage assemblies with Self Adjusting Bearings fitted, for various load types and Bearing/Slide combinations.

Information for GV3 Carriages and PRT2 Fixed Centre Carriages is listed. Please contact HepcoMotion's Technical Sales department to discuss any GFX application with a requirement for Self Adjusting Bearings.

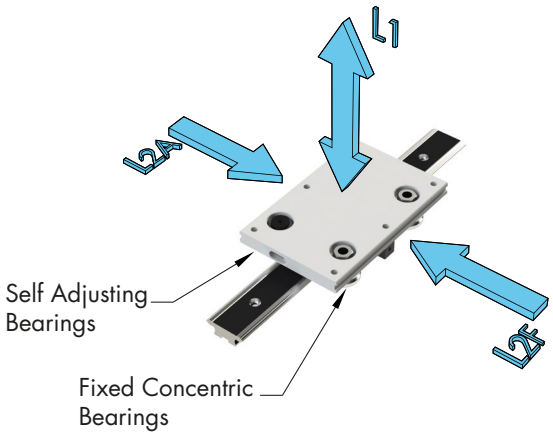

Direct Loads on Carriage Assembly

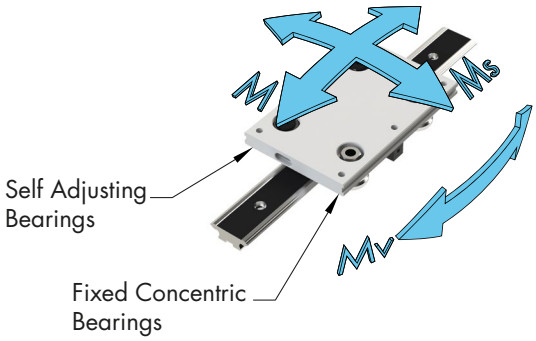

Moment Loads on Carriage Assembly

Calculating Carriage Capacity Factor

When assessing the suitability of a 'V' Slide System using a four-bearing Carriage with Self Adjusting Bearings, the loading on the system should be resolved into the direct load components, L_1 and L_2, and the moment load components M, Mv and Ms (see diagrams, above). For Self Adjusting Carriages, the L_2 direct load is broken down into two components: L_{2A} refers to a load applied towards the side of the Carriage fitted with Self Adjusting Bearings, L_{2F} refers to a load applied towards the side of the Carriage with Fixed Concentric Bearings.

The resultant L_2 load must be determined to calculate the Carriage Capacity Factor (C_{CF}) using one of the equations below:

For Carriages with a resultant L_{2A}, $$C_{CF} = \frac{L_1}{L_{1(max)}} + \frac{L_{2A}}{L_{2A(max)}} + \frac{M_s}{M_{s\,(max)}} + \frac{M_v}{M_{v\,(max)}} + \frac{M}{M_{(max)}}$$

For Carriages with a resultant L_{2F}, $$C_{CF} = \frac{L_1}{L_{1(max)}} + \frac{L_{2F}}{L_{2F(max)}} + \frac{M_s}{M_{s\,(max)}} + \frac{M_v}{M_{v\,(max)}} + \frac{M}{M_{(max)}}$$

C_{CF} should not exceed 1 for any combination of loads.

Please refer to the tables on the following page for the Load Capacities for GV3 and PRT2 Carriage assemblies with Self Adjusting Bearings.

Note: Hepco reserves the right, at its sole discretion, to change or modify the design of this product range, at any time.

Patent Pending		
EP3995713B1	US17/504 838	CN202111305552X

Self Adjusting Carriages

GV3 Carriage Assemblies with Self Adjusting Bearings

Maximum Working Load Capacity (with Self Adjusting Bearings in 'free-float')*2								
Carriage Assembly Part Number	Use with		L1(max)	L2A(max)*1	L2F(max)*1	Ms(max)	Mv(max)	M(max)
			N	N	N	Nm	Nm	Nm
AU 25 25 L135 SA	NS 25	S25	220	70	1350	2	5	14
AU 25 25 L180 SA			220	70	1350	2	6	19
AU 35 25 L150 SA	NS 35	S 35	220	70	1350	3	5	16
AU 35 25 L200 SA			220	70	1350	3	7	22
AU 50 25 L160 SA	NS 50	S 50	220	70	1350	5	6	17
AU 50 25 L220 SA			220	70	1350	5	8	24
AU 44 34 L180 SA	NM 44	M 44	530	180	2000	11	16	47
AU 44 34 L225 SA			530	180	2000	11	20	59
AU 60 34 L200 SA	NM 60	M 60	530	180	2000	15	18	53
AU 60 34 L280 SA			530	180	2000	15	26	74
AU 76 34 L240 SA	NM 76	L 76	530	180	2000	19	22	63
AU 76 34 L340 SA			530	180	2000	19	31	90

PRT2 Fixed Centre Carriage Assemblies with Self Adjusting Bearings

Maximum Working Load Capacity (with Self Adjusting Bearings in 'free-float')*2								
Carriage Assembly Part Number	Use with		L1(max)	L2A(max)*1	L2F(max)*1	Ms(max)	Mv(max)	M(max)
			N	N	N	Nm	Nm	Nm
FCC 25 159 SA	R25 159	...J25 SA...	220	70	1350	2	1	5
FCC 25 255 SA	R25 255		220	70	1350	2	1	4
FCC 25 351 SA	R25 351		220	70	1350	2	1	5
FCC 44 468 SA	R44 468	...J34 SA...	530	180	2000	11	7	20
FCC 44 612 SA	R44 612		530	180	2000	11	7	21

Calculating Carriage Life

Please contact Hepco's Technical Department for assistance with specification and life calculations.

Notes

1. The L2 load capacity for Self Adjusting Carriages is broken down into two components: L2A and L2F. L2A refers to a resultant load applied towards the side of the Carriage which has Self Adjusting Bearings fitted. L2F relates to a resultant load applied towards the side fitted with Fixed Concentric Bearings.
2. This data assumes the system is fully lubricated (at the point of contact between Slide and Bearings) throughout the System life. Lubrication is best achieved using Lubricators or a Bleed Lubrication facility within the Slide. Other methods that ensure presence of suitable lubrication are acceptable.

Note: Hepco reserves the right, at its sole discretion, to change or modify the design of this product range, at any time.

Patent Pending		
EP3995713B1	US17/504 838	CN202111305552X

Application Examples

PRESS OPERATION

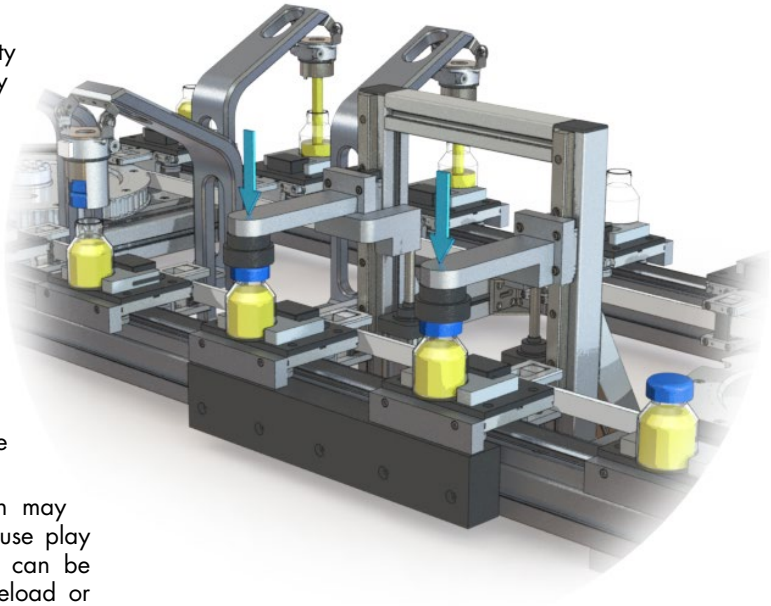

A unique feature of the **SA Bearing Arrangement** is the ability to displace when a moment load is applied to a stationary carriage. In this application, bottles lids are applied using a pressing operation.

To ensure the bearings on the **PRT2 FCC Carriages** are not loaded during the pressing operation, a static support plate is positioned under each carriage. During the operation, the SA bearing allows the carriage plate to move so it is in contact with the support plate, relieving the Bearings from the press load. The travel limits of the SA Bearing can be set via adjustment screws in the Carriage plate.

A small amount of clearance between the static support plate and carriage plates allows carriages to pass over the support plate during indexing.

In traditional carriage assemblies this type of operation may stress the Bearing assemblies which could, over time, cause play to develop. With **SA Bearing Assemblies** normal action can be resumed after the pressing operation, without loss of preload or running smoothness.

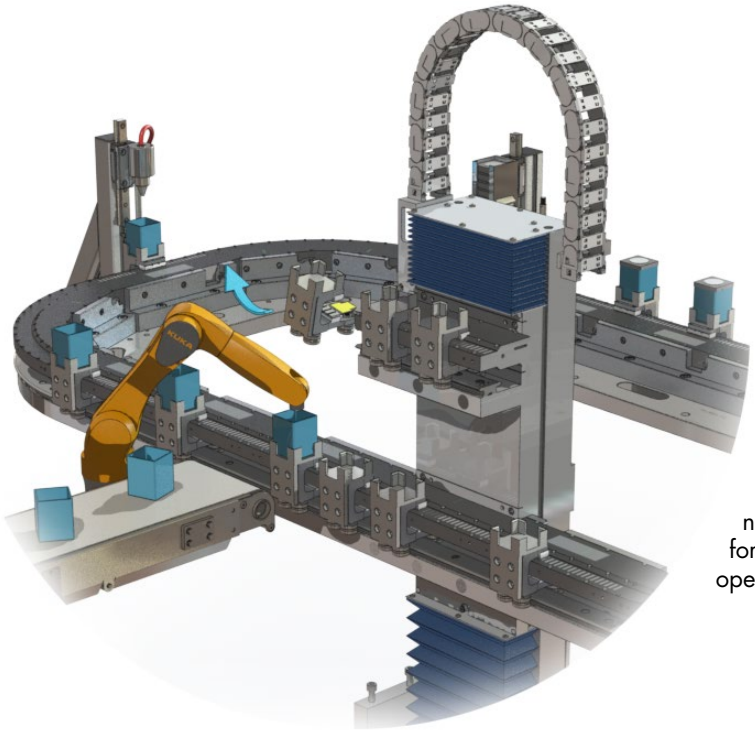

FIXTURE CHANGING WITHOUT DOWN-TIME

In this example, a **GFX system with Track Management** is used to alternate fixtures for on-the-fly product changes. Fixtures on carriages are replaced at regular intervals (when product lines change and to perform routine maintenance). The Track Management system allows a set quantity of carriages to be separated from the main track system and manually replaced.

GFX carriages with SA bearings are specified, allowing the operator to slide ready-prepared carriages with new fixtures onto the system. No down-time is required for setting carriages on the system, allowing continuous operation whilst this procedure is carried out.

TURNTABLE TRANSFER SYSTEM

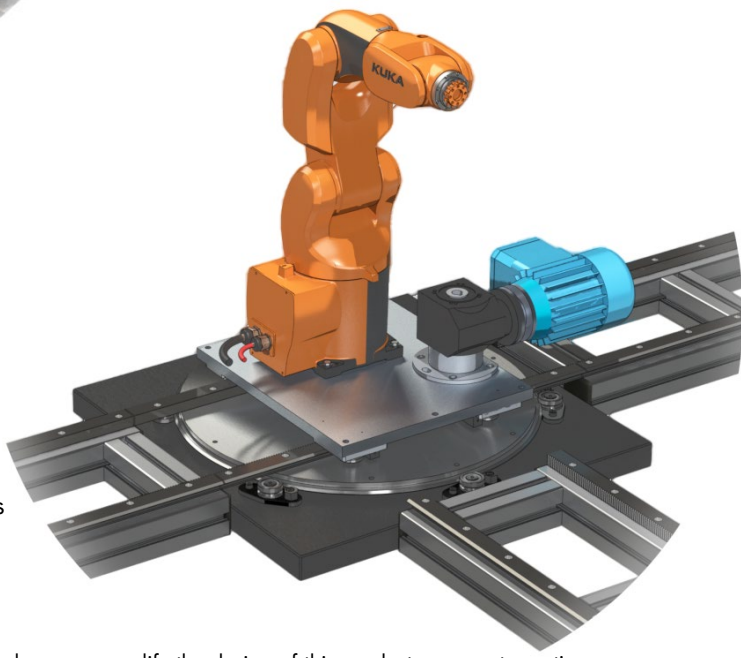

GV3 Single Edge Spacer Slides are spaced apart to accommodate the platform required for this transfer system. A **PRT2 Ring Disc** provides rotary movement and a platform for the turntable.

A custom carriage plate with **SA bearing assemblies** travels smoothly on and off the turntable, allowing for variation in the distance between each pair of Single Edge Spacer Slides.

The nature of the SA bearing assembly means that preload is maintained in all sections of the system.

Note: Hepco reserves the right, at its sole discretion, to change or modify the design of this product range, at any time.

Patent Pending		
EP3995713B1	US17/504 838	CN202111305552X

AUTOMATED PROCESS RIG

PRT2 carriage assemblies are mounted to a 310° **Double Edge Ring Segment** to provide rotary motion (about a component placed in the centre of the rig) to two automated process heads. A **GV3 SA carriage** mounted to a **Double Edge Spacer Slide** moves the component to be soldered into position in the centre of the rig.

During processing, debris may drop from the process heads onto the GV3 Spacer Slide. In critical operations where the process cannot be paused for cleaning, the SA Bearings enable the carriage to move over any debris that sits on the Slides until the rig can be cleaned.

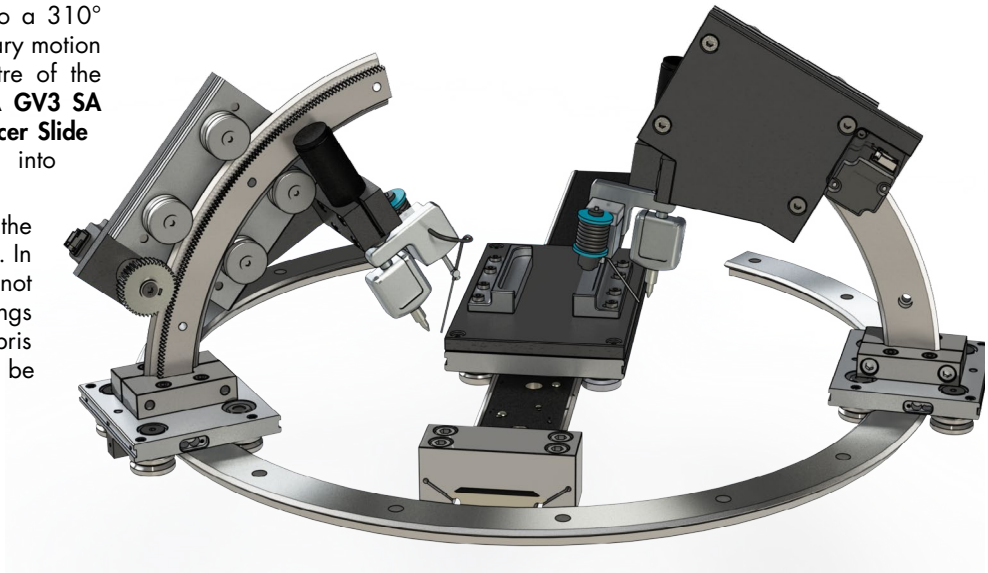

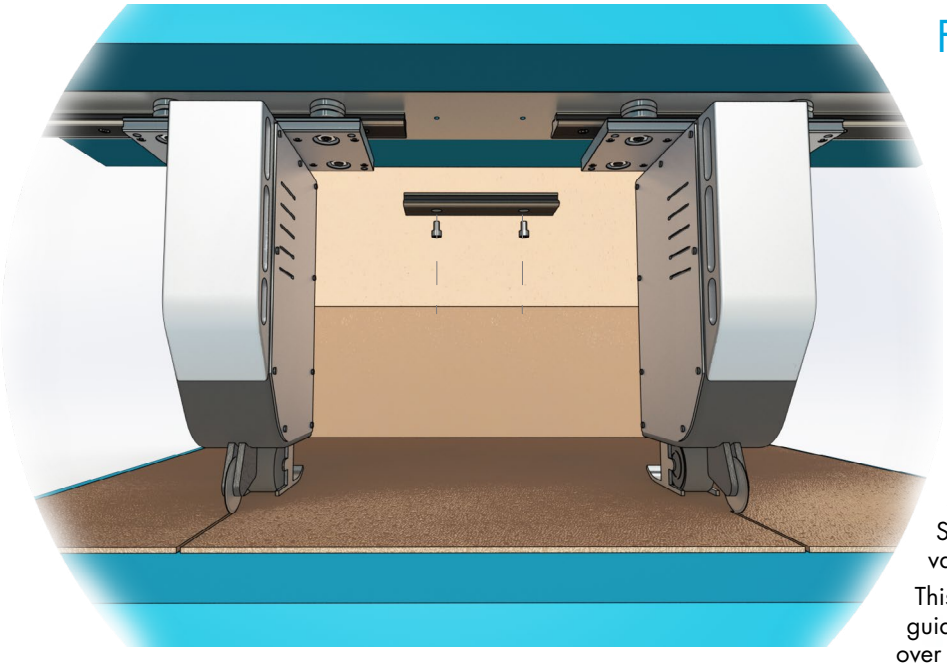

RETRO-FIT GUIDANCE FOR CUTTING MACHINE

GV3 Spacer Slides are retro-fitted to this machine in place of traditional recirculating ball guides. As wear develops in traditional recirculating ball guide systems, play develops in the bearing blocks. At this stage the entire length of track must be replaced (and matched) and new bearing blocks fitted.

A **GV3 Carriage with SA bearings** will continue to operate with consistent preload after wear develops. When the slide must be replaced, a small section can be removed (rather than the entire length). The new section of Slide does not need to be matched across apexes to the existing sections; the SA bearing arrangement will accommodate variation in V-width.

This combination of features acts to extend the guidance system life span and reduce total cost over the life of the machine.

Note: Hepco reserves the right, at its sole discretion, to change or modify the design of this product range, at any time.

HepcoMotion

HepcoMotion®
Lower Moor Business Park,
Tiverton Way, Tiverton,
Devon, England EX16 6TG

Tel: +44 (0) 1884 257000
E-mail: sales@hepcomotion.com

Catalogue No. SAC 03.5 UK © 2022 Hepco Slide Systems Ltd.
Reproduction in whole or part without prior authorisation from Hepco is prohibited. Although every effort has been made to ensure the accuracy of the information in this datasheet, Hepco cannot accept liability for any omissions or errors. Hepco reserves the right to make alterations to the product resulting from technical developments.
Many Hepco products are protected by: Patents, Copyright, Design Right or Registered Design. Infringement is strictly prohibited and may be challenged in law.
The Customer's attention is drawn to the following clause in Hepco's conditions of sale:
'It shall be the Customer's sole responsibility to ensure that goods supplied by Hepco will be suitable or fit for any particular application or purpose of the Customer, whether or not such application or purpose is known to Hepco. The Customer will be solely responsible for any errors in, or omission from, any specifications or information the Customer provides. Hepco will not be obliged to verify whether any such specifications or information are correct or sufficient for any application or purpose.'
Hepco's full conditions of sale are available on request and will apply to all quotations and contracts for the supply of items detailed in this datasheet.
HepcoMotion is the trading name of Hepco Slide Systems Ltd.

HepcoMotion.com